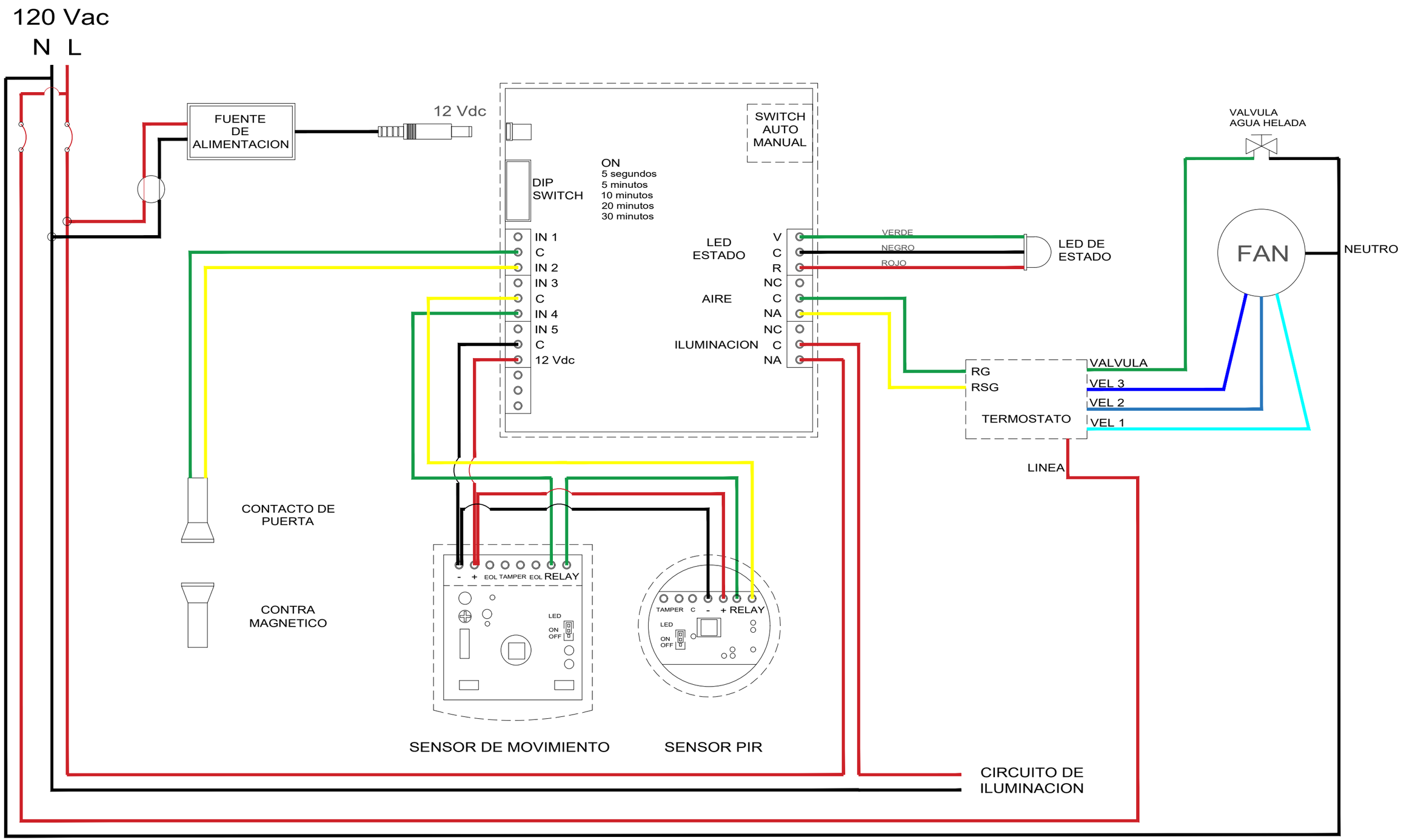CONEXION FT14-R5